Cambridge Assessment International Education

Cambridge International AS & A Level

CANDIDATE NAME

CENTRE NUMBER

CANDIDATE NUMBER

8514556844

PHYSICS **9702/21**

Paper 2 AS Level Structured Questions **May/June 2024**

1 hour 15 minutes

You must answer on the question paper.

No additional materials are needed.

INSTRUCTIONS

- Answer **all** questions.
- Use a black or dark blue pen. You may use an HB pencil for any diagrams or graphs.
- Write your name, centre number and candidate number in the boxes at the top of the page.
- Write your answer to each question in the space provided.
- Do **not** use an erasable pen or correction fluid.
- Do **not** write on any bar codes.
- You may use a calculator.
- You should show all your working and use appropriate units.

INFORMATION

- The total mark for this paper is 60.
- The number of marks for each question or part question is shown in brackets [ ].

This document has **20** pages. Any blank pages are indicated.

© UCLES 2024

Data

acceleration of free fall	g	=	$9.81\ \text{m s}^{-2}$
speed of light in free space	c	=	$3.00 \times 10^{8}\ \text{m s}^{-1}$
elementary charge	e	=	$1.60 \times 10^{-19}\ \text{C}$
unified atomic mass unit	1 u	=	$1.66 \times 10^{-27}\ \text{kg}$
rest mass of proton	m_p	=	$1.67 \times 10^{-27}\ \text{kg}$
rest mass of electron	m_e	=	$9.11 \times 10^{-31}\ \text{kg}$
Avogadro constant	N_A	=	$6.02 \times 10^{23}\ \text{mol}^{-1}$
molar gas constant	R	=	$8.31\ \text{J K}^{-1}\ \text{mol}^{-1}$
Boltzmann constant	k	=	$1.38 \times 10^{-23}\ \text{J K}^{-1}$
gravitational constant	G	=	$6.67 \times 10^{-11}\ \text{N m}^2\ \text{kg}^{-2}$
permittivity of free space	ε_0	=	$8.85 \times 10^{-12}\ \text{F m}^{-1}$
	$\left(\frac{1}{4\pi\varepsilon_0}\right.$	=	$\left.8.99 \times 10^{9}\ \text{m F}^{-1}\right)$
Planck constant	h	=	$6.63 \times 10^{-34}\ \text{J s}$
Stefan–Boltzmann constant	σ	=	$5.67 \times 10^{-8}\ \text{W m}^{-2}\ \text{K}^{-4}$

Formulae

uniformly accelerated motion	s	=	$ut + \frac{1}{2}at^2$
	v^2	=	$u^2 + 2as$
hydrostatic pressure	Δp	=	$\rho g \Delta h$
upthrust	F	=	$\rho g V$
Doppler effect for sound waves	f_o	=	$\frac{f_\text{s} v}{v \pm v_\text{s}}$
electric current	I	=	$Anvq$
resistors in series	R	=	$R_1 + R_2 + \ldots$
resistors in parallel	$\frac{1}{R}$	=	$\frac{1}{R_1} + \frac{1}{R_2} + \ldots$

© UCLES 2024

BLANK PAGE

1 The drag force F_D acting on an object falling through air is given by

$$F_D = \frac{1}{2} C\rho A v^2$$

where A is the cross-sectional area of the object,
v is the velocity of the object in the air,
ρ is the density of the air and
C is a constant called the drag coefficient.

(a) Use SI base units to show that the drag coefficient has no units.

[3]

(b) Fig. 1.1 shows a sphere falling at terminal velocity in air.

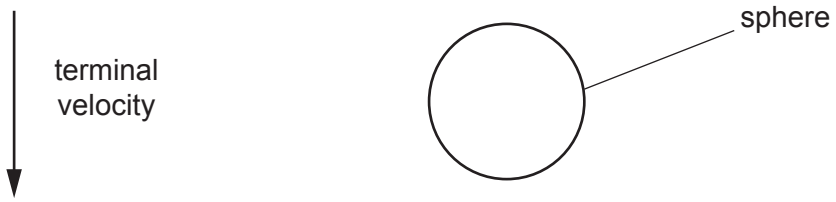

Fig. 1.1

Assume that the upthrust on the sphere is negligible.

On Fig. 1.1, draw and label arrows to show the directions of the **two** forces acting on the sphere. [2]

(c) The mass of the sphere is 49 g.

Calculate the drag force F_D acting on the sphere.

F_D = ... N [2]

(d) The sphere is falling in air at a terminal velocity of 25 in SI base units.
The density of the air is 1.2 in SI base units.
The diameter of the sphere is 0.060 in SI base units.

Use your answer in **(c)** to calculate the drag coefficient *C* for the sphere.

C = ... [3]

[Total: 10]

2 **(a)** Define velocity.

.....

..... [1]

(b) A student throws a ball over a vertical wall of height *h*, as shown in Fig. 2.1.

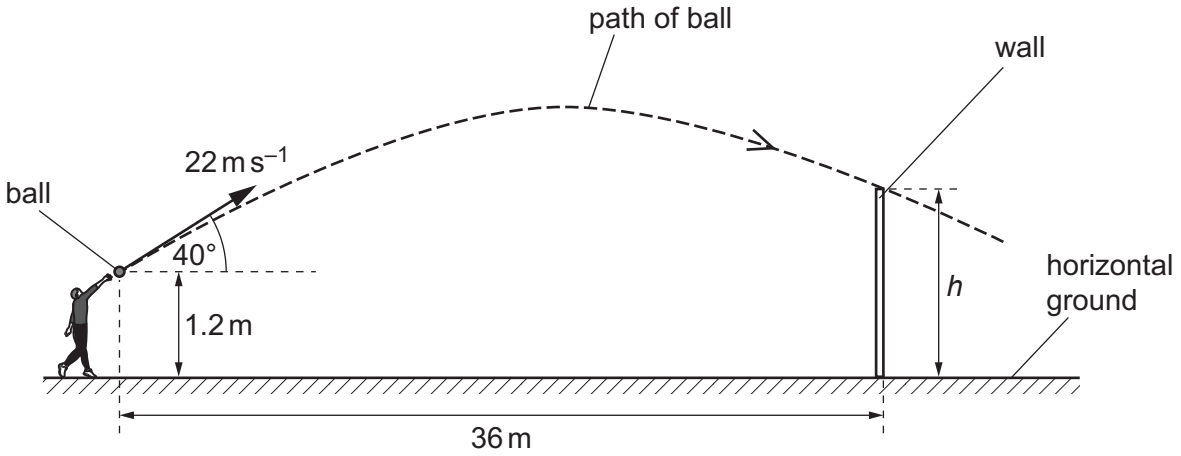

Fig. 2.1 (not to scale)

The ball leaves the hand of the student at a height of 1.2 m above the horizontal ground.
The ball has an initial velocity of 22 m s^{-1} at an angle of 40° to the horizontal.
The wall is a horizontal distance of 36 m from where the student releases the ball.

Air resistance is negligible.

(i) Determine the time taken for the ball to reach the wall.

time taken = ... s [2]

(ii) Calculate the vertical component u of the initial velocity of the ball.

u = ... $m\,s^{-1}$ [1]

(iii) The ball just goes over the wall.

Calculate the height h of the wall.

h = ... m [3]

[Total: 7]

3 **(a)** State the principle of conservation of momentum.

.....

.....

..... [2]

(b) An object of mass $2m$ is travelling at a speed of $5.0\,m\,s^{-1}$ in a straight line. It collides with an object of mass $3m$ which is initially stationary, as shown in Fig. 3.1.

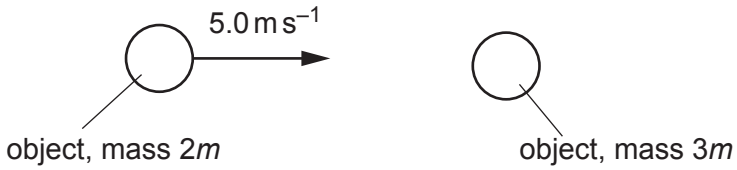

Fig. 3.1

After the collision, the object of mass $2m$ moves with velocity v at an angle of 30° to its original direction of motion.

The object of mass $3m$ moves with velocity w also at an angle of 30°, as shown in Fig. 3.2.

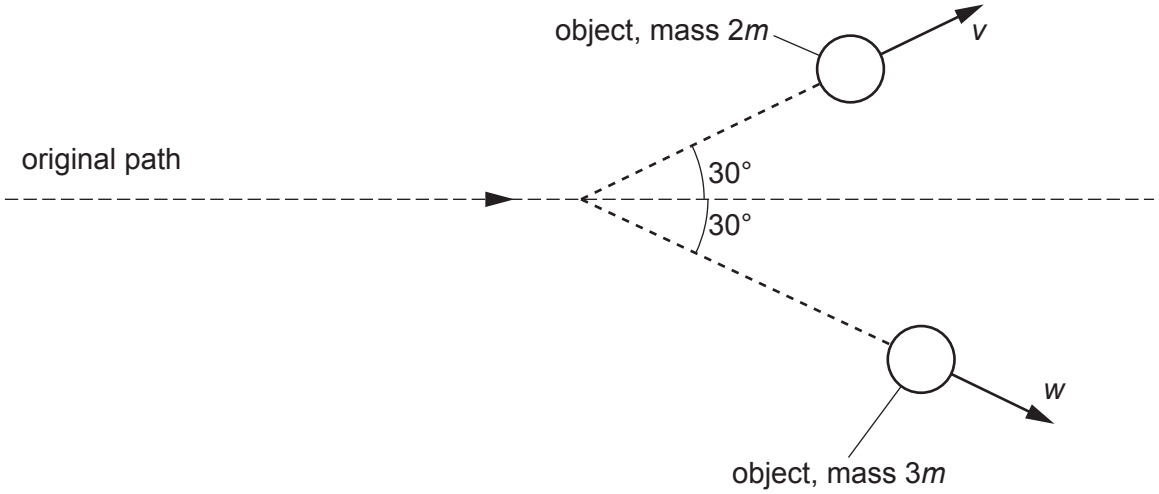

Fig. 3.2

© UCLES 2024

By considering the conservation of momentum in two dimensions, calculate the magnitudes of v and w.

v = ... $m\,s^{-1}$

w = ... $m\,s^{-1}$
[4]

(c) An object of mass 4.2 kg is travelling in a straight line at a speed of 6.0 $m\,s^{-1}$. The object is brought to rest in a distance of 0.050 m by a constant force.

Calculate the magnitude of this force.

force = ... N [3]

[Total: 9]

4 **(a)** Define strain.

.....

..... [1]

(b) A copper wire of length 4.0 m has a uniform cross-sectional area of $4.5 \times 10^{-7}\,m^2$.

A tensile force of 18 N is applied to the wire. This causes the wire to extend by 1.4 mm up to its limit of proportionality.

(i) Calculate the Young modulus of the wire.

Young modulus = ...Pa [3]

(ii) On Fig. 4.1, draw a line to show how the stress varies with the strain for the wire up to its limit of proportionality.

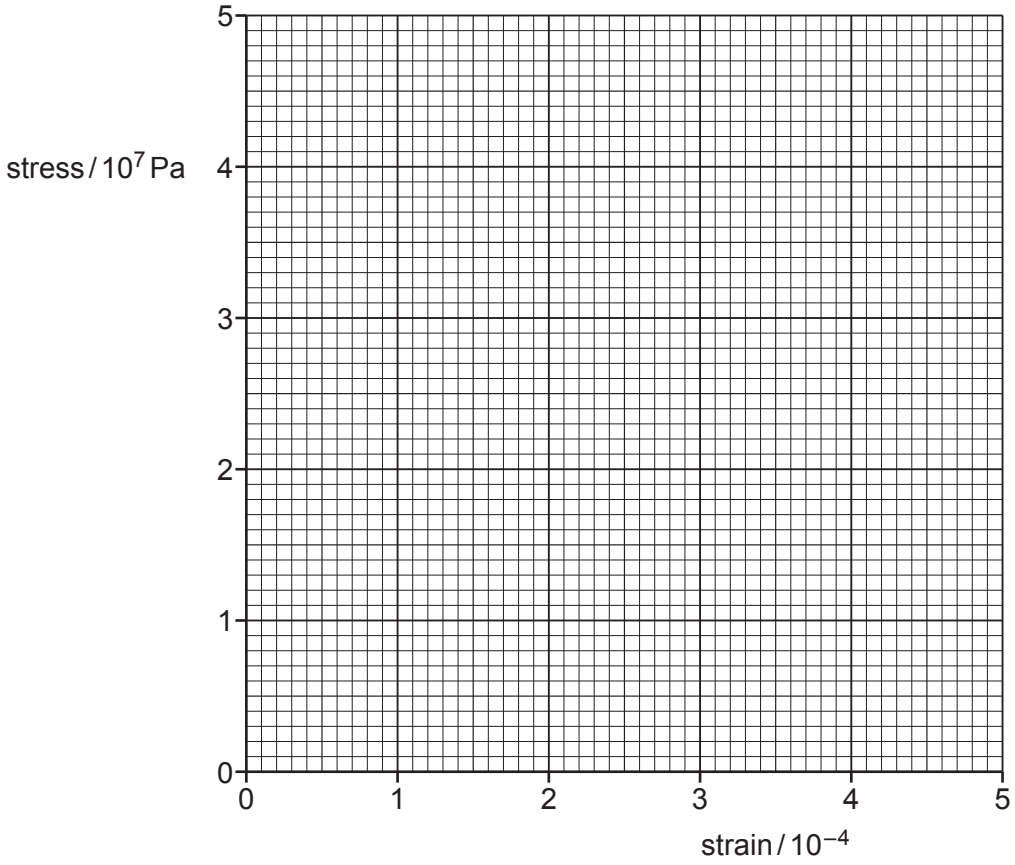

Fig. 4.1

[2]

(c) A second copper wire has the same length as the wire in **(b)** but a larger diameter. Both wires are subjected to a tensile force of 18 N.

By placing a tick (✓) in each row, complete Table 4.1 to compare the stress and strain of the two wires.

Table 4.1

	greater in second wire	less in second wire	the same in both wires
stress			
strain			

[2]

[Total: 8]

5 A stretched string PQ has length 1.2 m. One end of the string is attached to a vibration generator and the other end is attached to a wall, as shown in Fig. 5.1.

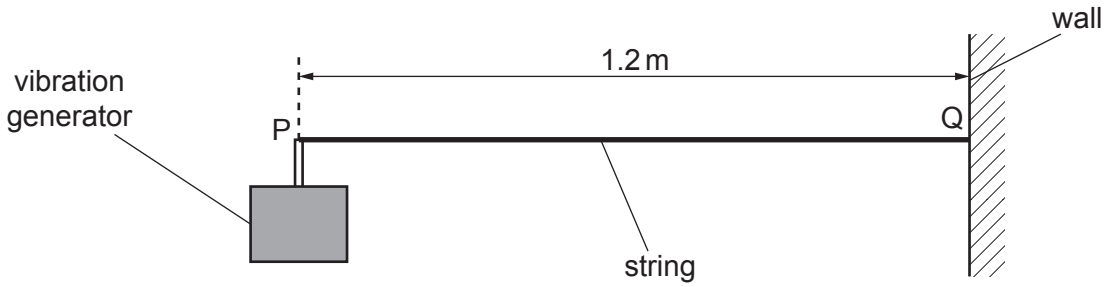

Fig. 5.1

The vibration generator is switched on and a stationary wave is formed on the string. The string is shown at one instant of time in Fig. 5.2.



Fig. 5.2

(a) Explain how a stationary wave is formed between the vibration generator and the wall.

.....

.....

.....

..... [2]

(b) Calculate the wavelength of the stationary wave shown in Fig. 5.2.

wavelength = ... m [1]

© UCLES 2024

(c) Fig. 5.3 shows the stationary wave at time $t = 0$ when all points on the wave are at their maximum displacements.

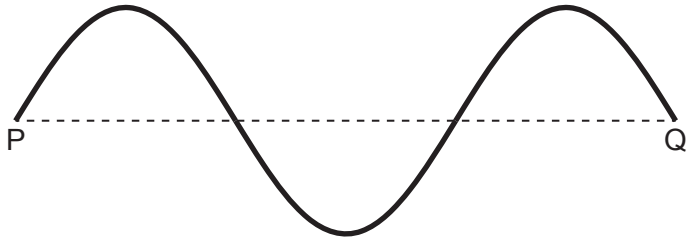

Fig. 5.3

The period of the wave is 0.16 s.

On Fig. 5.3, sketch the shape of the stationary wave at time $t = 0.24$ s. [2]

(d) Points R and T on the string are a horizontal distance of 0.30 m apart and in the positions shown in Fig. 5.4.

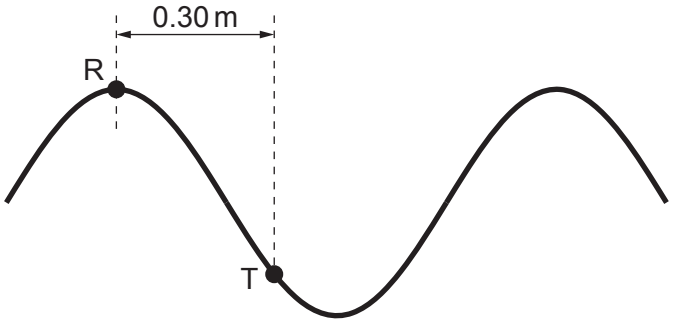

Fig. 5.4

State the phase difference between the oscillations of points R and T.

phase difference = ... ° [1]

(e) Calculate the speed of the progressive waves on the stretched string.

speed = ... $m\,s^{-1}$ [2]

[Total: 8]

6 **(a)** State Kirchhoff's first law.

.....

..... [1]

(b) A cell with internal resistance r is connected to two resistors of resistances R_1 and R_2 as shown in Fig. 6.1.

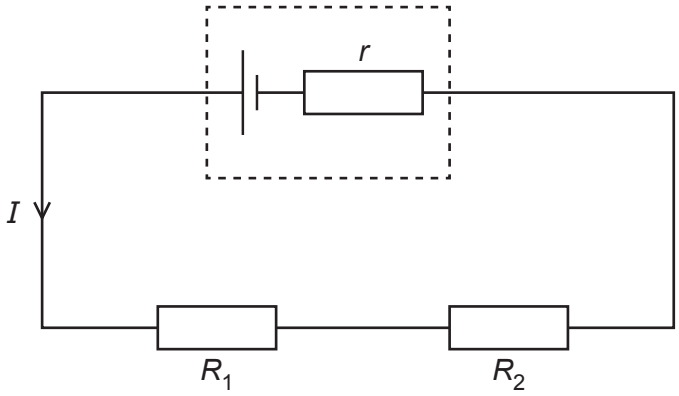

Fig. 6.1

The potential differences (p.d.s) across R_1 and R_2 are V_1 and V_2 respectively.
The terminal p.d. across the cell is V.
The current in the circuit is I.

Use Kirchhoff's laws to show that the total resistance R_T of the external circuit is given by

$$R_T = R_1 + R_2 .$$

[2]

(c) The electromotive force (e.m.f.) of the cell in Fig. 6.1 is 1.50 V.

The values of R_1 and R_2 are 10 Ω and 15 Ω respectively. The terminal p.d. of the cell is 1.35 V.

Calculate the internal resistance r of the cell.

r = ... Ω [3]

(d) A resistor of resistance R_3 is added to the circuit in Fig. 6.1, so that the circuit is as shown in Fig. 6.2.

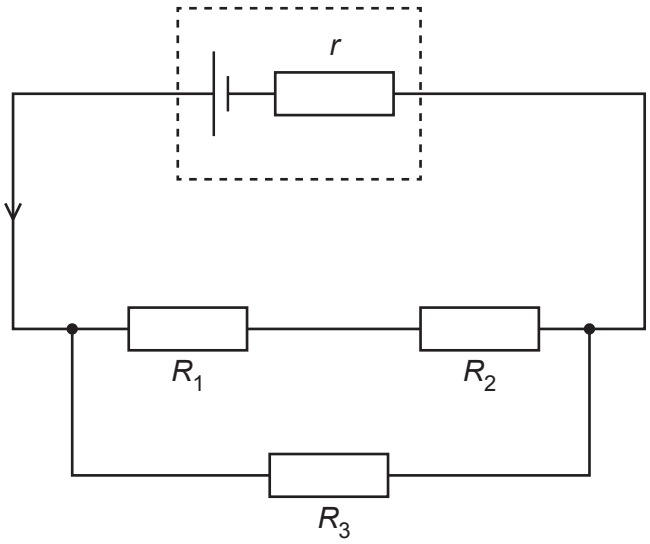

Fig. 6.2

State and explain the effect, if any, of this change on:

(i) the current in the cell

.....

.....

..... [2]

(ii) the terminal p.d. of the cell.

.....

.....

..... [2]

[Total: 10]

7 Nuclei of an isotope of copper (Cu) each have 29 protons and 37 neutrons. This isotope is a β^- emitter.

(a) State the nuclide notation in the form ${}^{A}_{Z}X$ for this nucleus of copper.

[1]

(b) The energy spectrum of the β^- radiation emitted by a sample of this isotope is shown in Fig. 7.1.

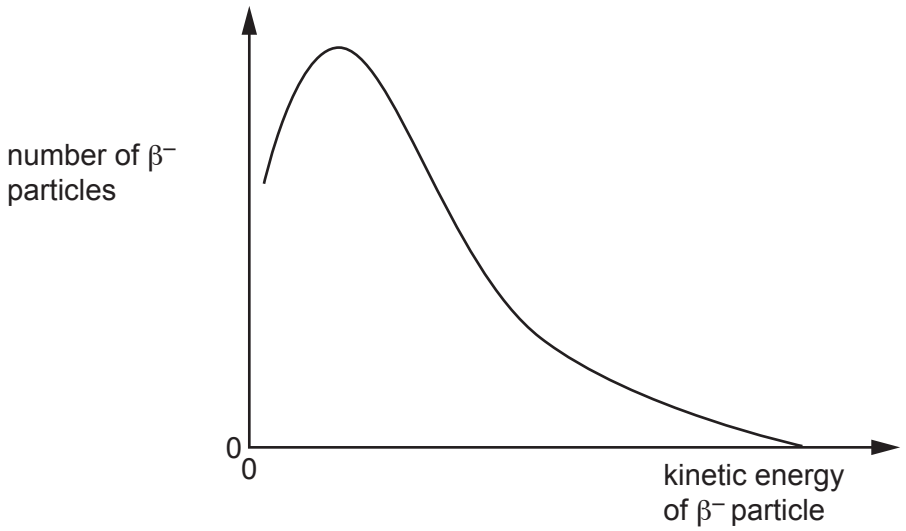

Fig. 7.1

(i) Use Fig. 7.1 to explain why other particles apart from the β^- particles must be emitted during this decay.

.....

.....

.....

.....

..... [3]

(ii) State the name of the other particle emitted during the decay of this isotope.

..... [1]

(iii) The copper isotope decays to an isotope of zinc (Zn).

Give the radioactive decay equation for this decay. Include the nucleon and proton numbers of **all** the particles involved.

[3]

[Total: 8]

© UCLES 2024

BLANK PAGE

BLANK PAGE

© UCLES 2024

BLANK PAGE

Permission to reproduce items where third-party owned material protected by copyright is included has been sought and cleared where possible. Every reasonable effort has been made by the publisher (UCLES) to trace copyright holders, but if any items requiring clearance have unwittingly been included, the publisher will be pleased to make amends at the earliest possible opportunity.

To avoid the issue of disclosure of answer-related information to candidates, all copyright acknowledgements are reproduced online in the Cambridge Assessment International Education Copyright Acknowledgements Booklet. This is produced for each series of examinations and is freely available to download at www.cambridgeinternational.org after the live examination series.

Cambridge Assessment International Education is part of Cambridge Assessment. Cambridge Assessment is the brand name of the University of Cambridge Local Examinations Syndicate (UCLES), which is a department of the University of Cambridge.

© UCLES 2024